SIMPLIFIED WIRING DIAGRAM FOR DUCATI 750 GT BEVEL TWINS

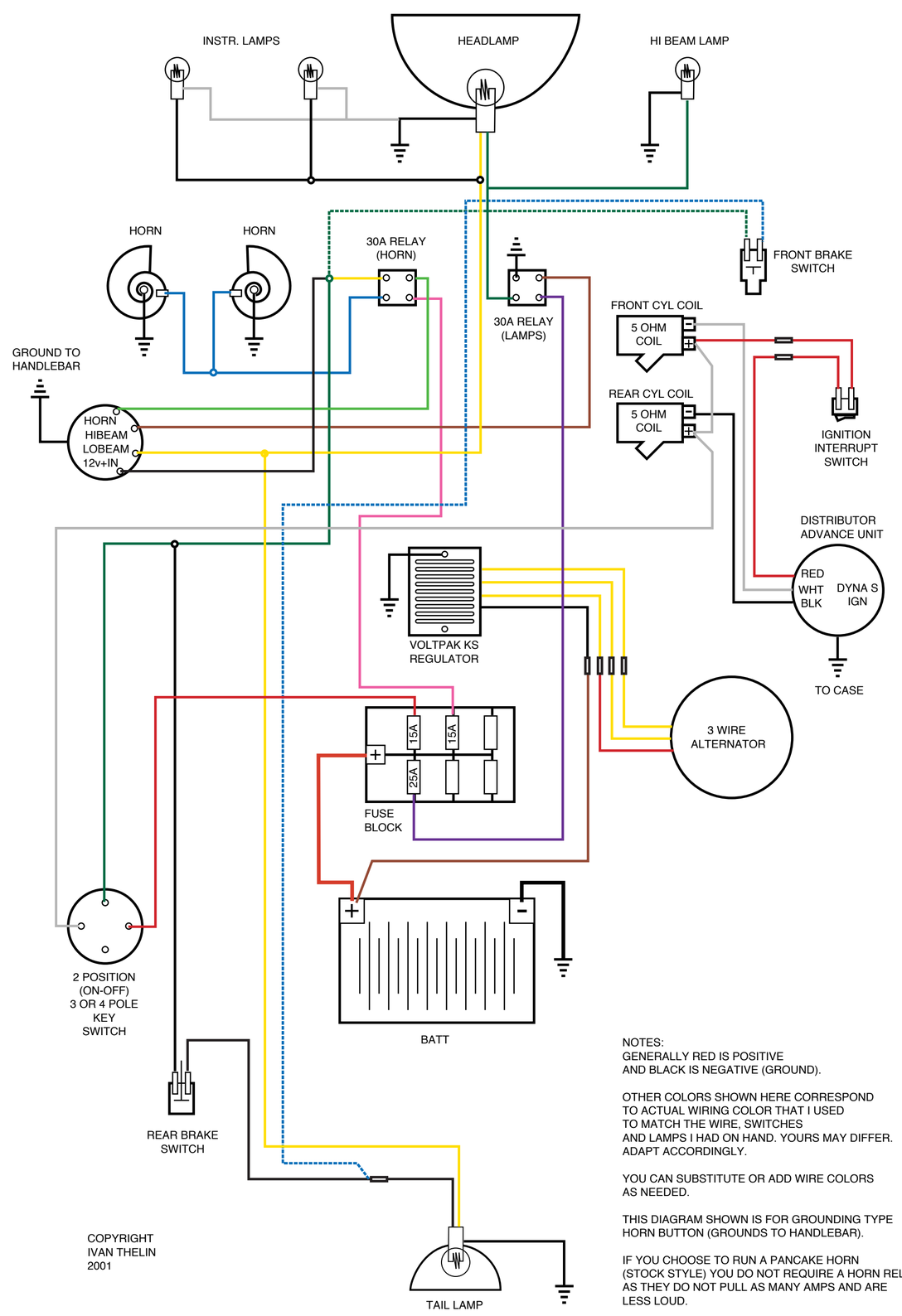

COPYRIGHT
IVAN THELIN
2001

NOTES:
GENERALLY RED IS POSITIVE
AND BLACK IS NEGATIVE (GROUND).

OTHER COLORS SHOWN HERE CORRESPOND
TO ACTUAL WIRING COLOR THAT I USED
TO MATCH THE WIRE, SWITCHES
AND LAMPS I HAD ON HAND. YOURS MAY DIFFER.
ADAPT ACCORDINGLY.

YOU CAN SUBSTITUTE OR ADD WIRE COLORS
AS NEEDED.

THIS DIAGRAM SHOWN IS FOR GROUNDING TYPE
HORN BUTTON (GROUNDS TO HANDLEBAR).

IF YOU CHOOSE TO RUN A PANCAKE HORN
(STOCK STYLE) YOU DO NOT REQUIRE A HORN RELAY
AS THEY DO NOT PULL AS MANY AMPS AND ARE
LESS LOUD.